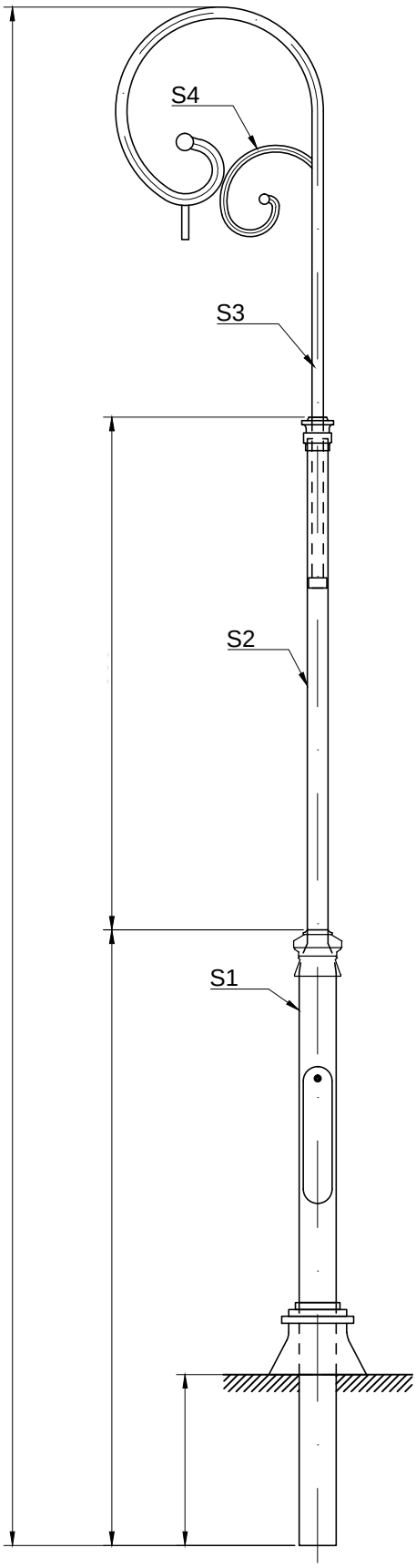
S4
S3
S2
S1